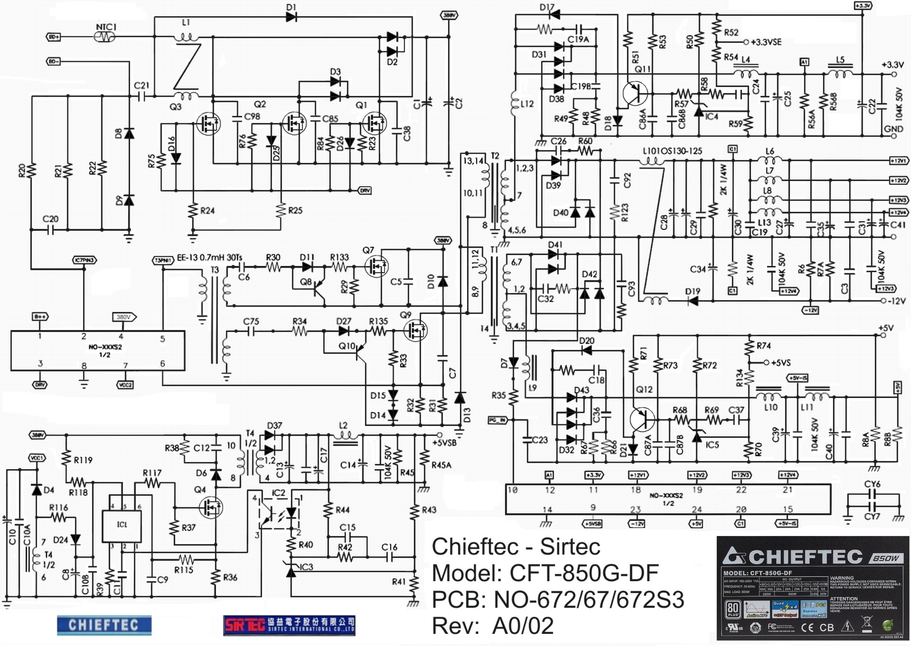

Chieftec - Sirtec
Model: CFT-850G-DF
PCB: NO-672/67/672S3
Rev: A0/02

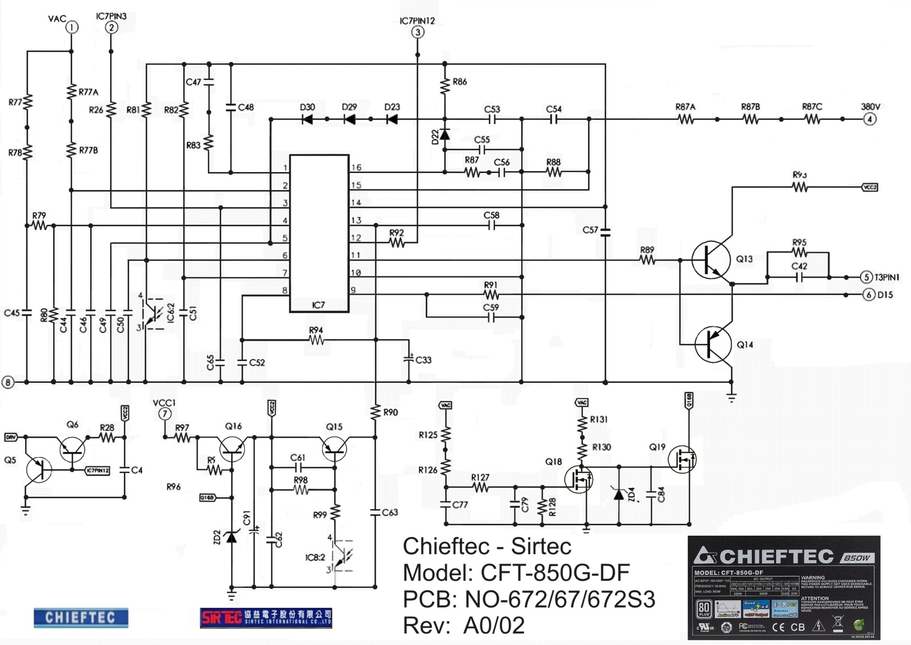

Chieftec - Sirtec
Model: CFT-850G-DF
PCB: NO-672/67/672S3
Rev: A0/02

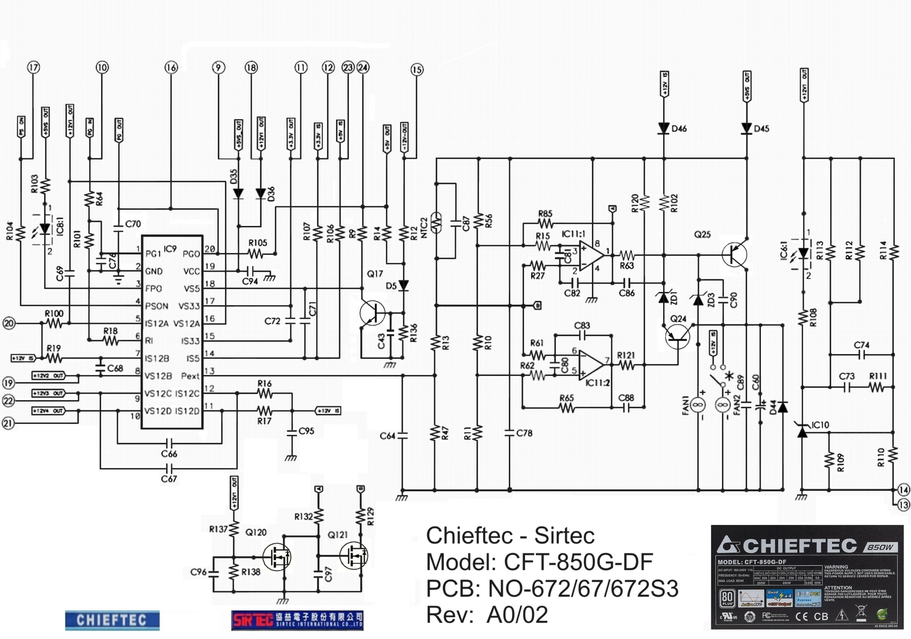

Chieftec - Sirtec
Model: CFT-850G-DF
PCB: NO-672/67/672S3
Rev: A0/02

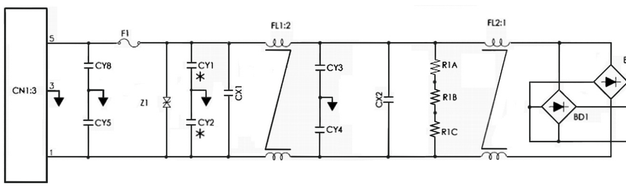

Chieftec - Sirtec
Model: CFT-850G-DF
PCB: NO-672/67/672S3
Rev: A0/02