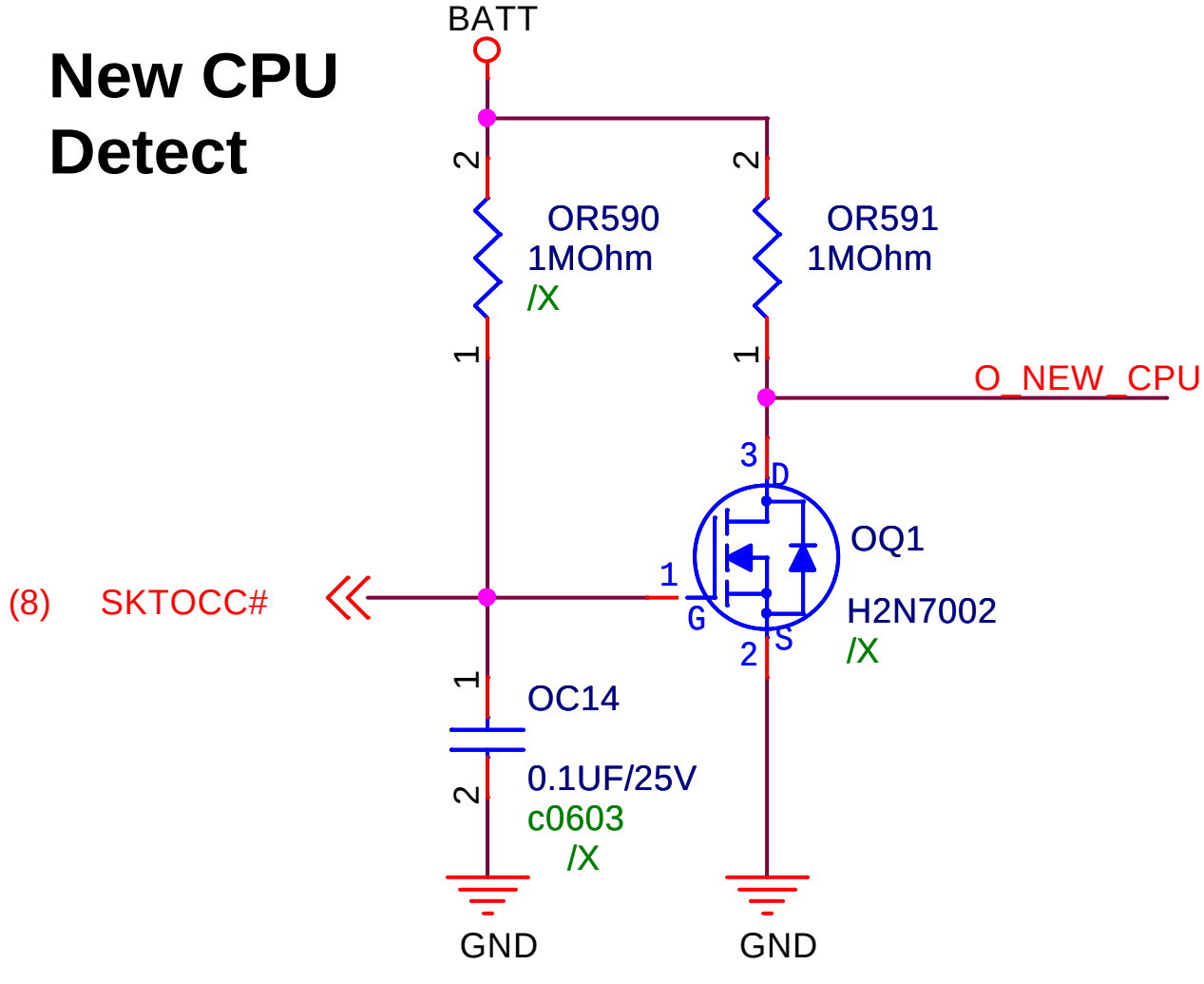New CPU Detect