Standby Power Supply (26")

A2 STANDBY POWER SUPPLY 26”

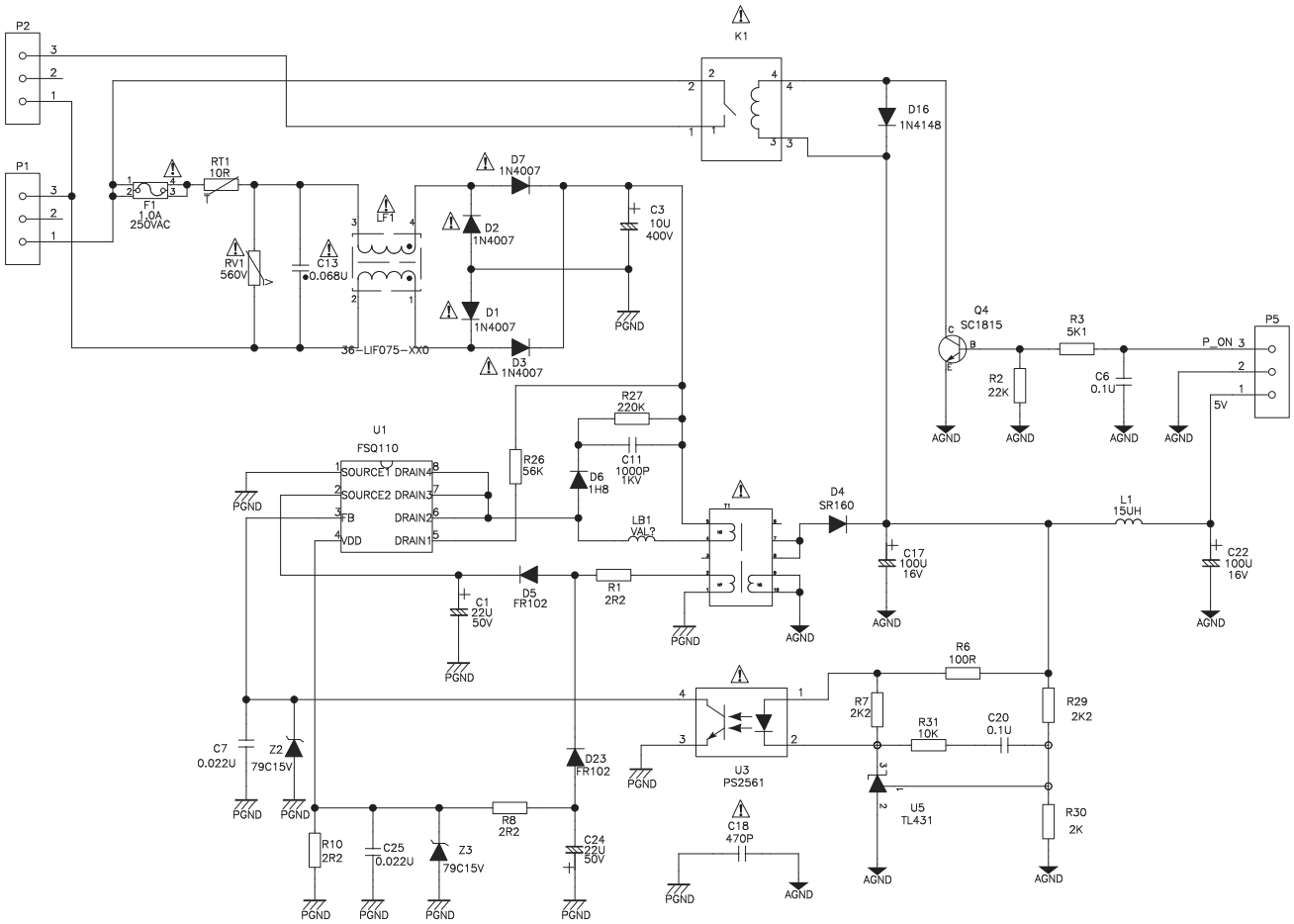

I_17930_028.eps
220408