6.2 Power Board

715G2538-5

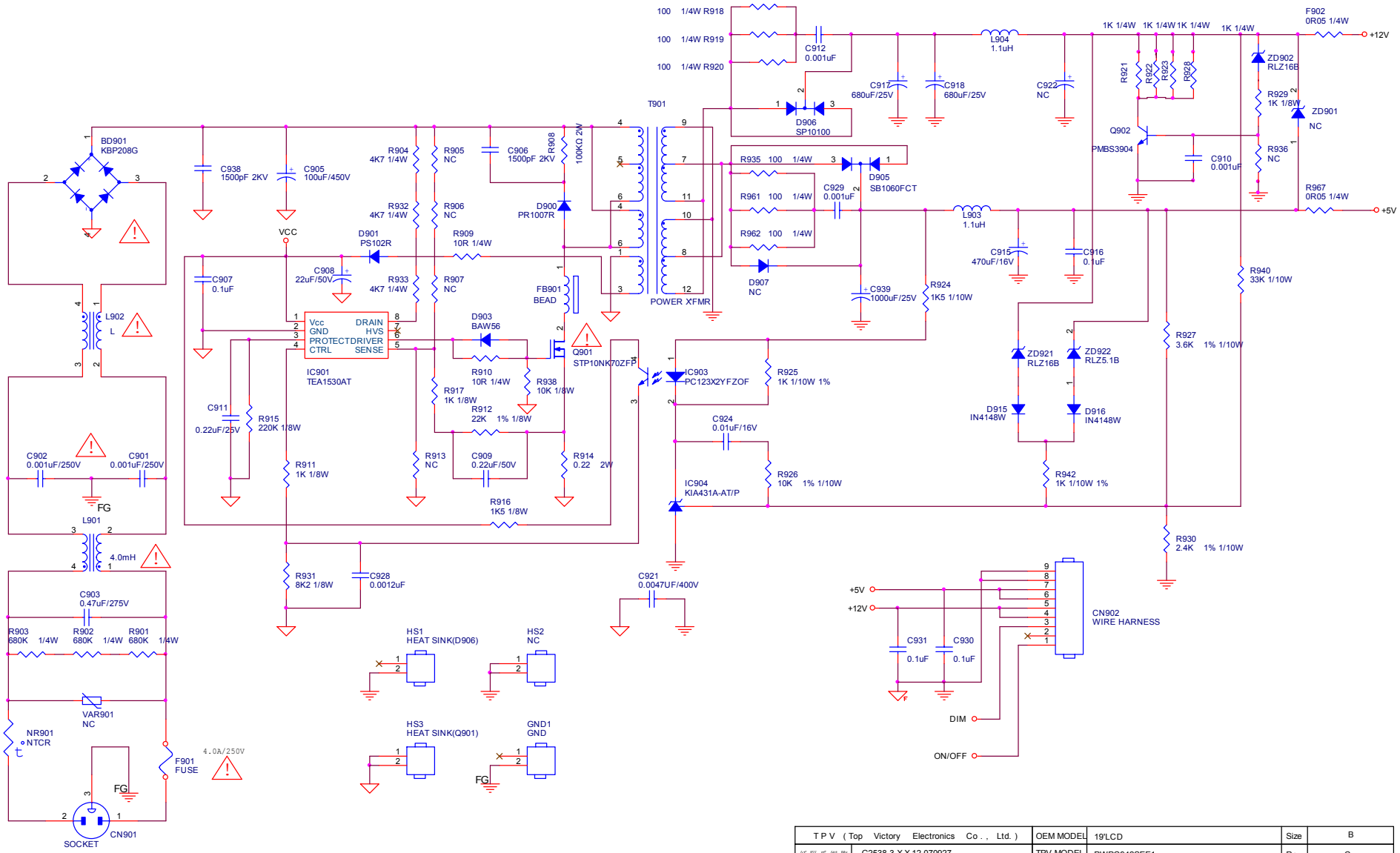

T P V （Top Victory Electronics Co., Ltd.）		OEM MODEL	19'LCD	Size	B
話 隔 瓜 鋼 腹	G2538-3-X-X-12-070927	TPV MODEL	PWPC942SEE1	Rev	C
Key Component	02.POWER	PCB NAME	715G2538 3	称爹	<称爹>
Date	Thursday, September 27, 2007	Sheet	2 of 3		